Rev	Date	Description
A	1/31/11	Release for Production
B	5/28/12	Rev Cartridge for Injection Molding

Note	Item/Pg	NOTES		Product Number
		Bulkhead Plate Assembly	ASTM A36 Powder Coated Blk	JF4PC
			316 Stainless Steel	JF4SS
1	001/2	Bulkhead Plate		Included in Assembly
2	002/2	Bulkhead Plate Cap Washer		
3	003/2	Bulkhead Plate Cage		
		Filter Cartridge Assembly	UV Protected ABS	JF4FC
4	004/3	Standard Face Plate Cap		Included in Assembly
5	005/4	Outer Cartridge Core		
6	006/5	Inner Filter Media		
7	007/4	Inner Cartridge Core		
8	008/6	Bulkhead Wall Gasket		
9			OPTIONS	
10				
11				
12				

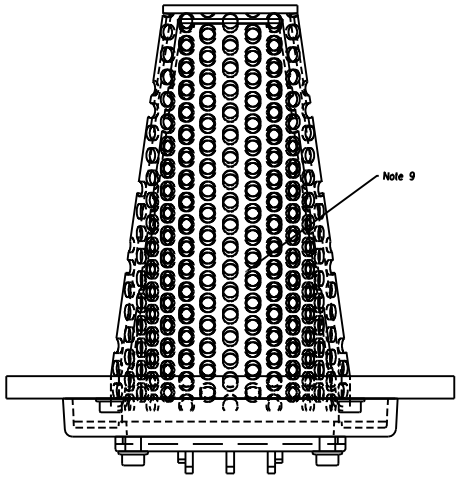

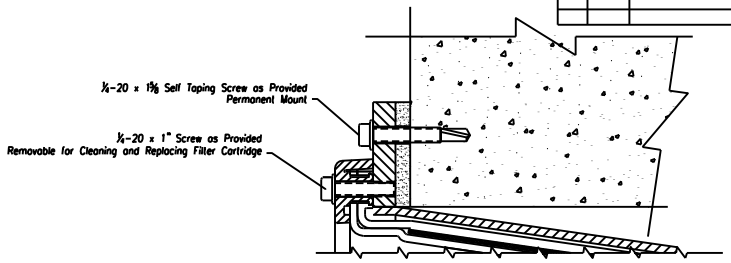

Recommended Bulkhead & Filter Assembly Mounting

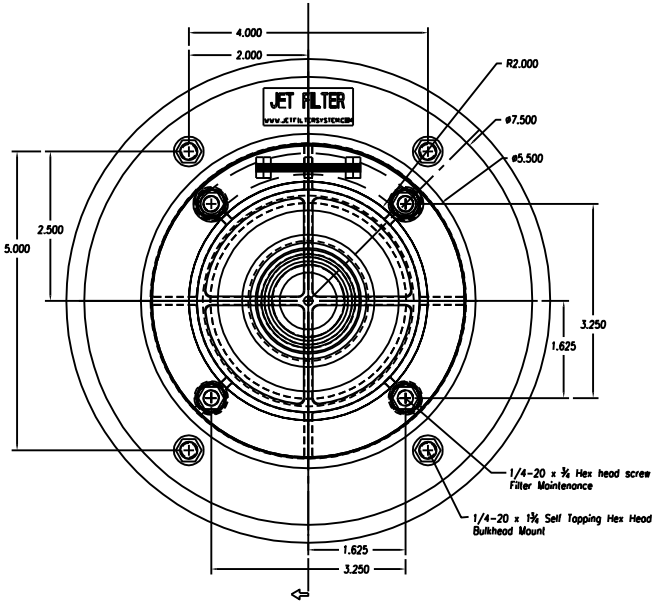

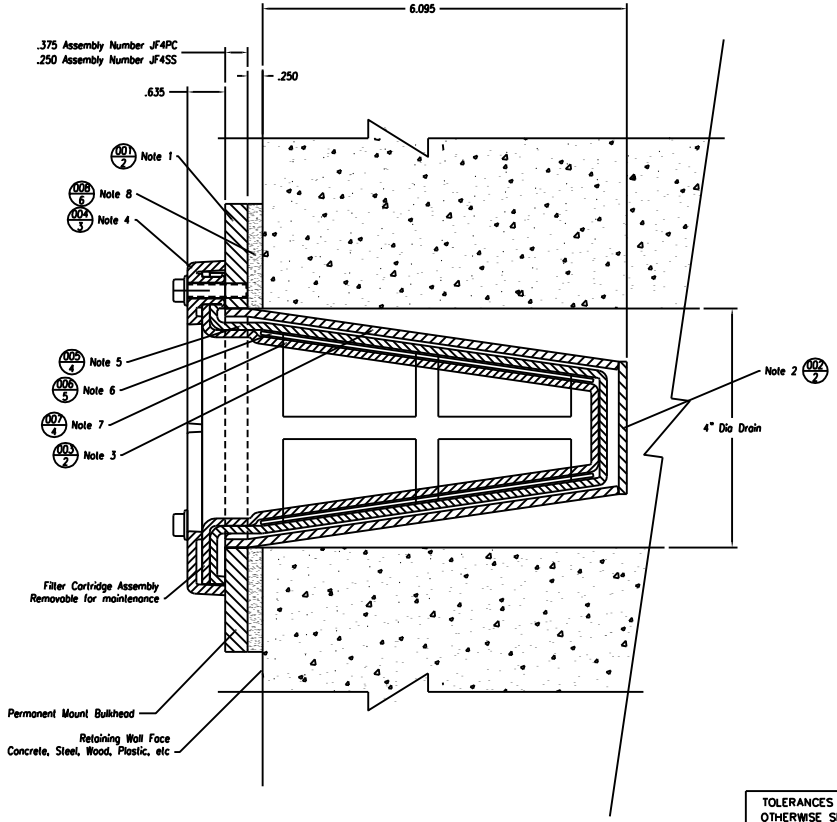

THIRD ANGLE PROJECTION
BREAK ALL UNNECESSARY SHARP EDGES

TOLERANCES UNLESS OTHERWISE SPECIFIED			
2 PLACE	3 PLACE	4 PLACE	ANGLES
±.010	±.005	±.001	±1°

DEVIATIONS FROM INTENDED SHAPE (FLATNESS, ROUNDNESS, SQUARENESS, ETC.) MUST BE WITHIN STATED DIMENSIONAL TOLERANCES

Jet Filter System
info@jetfiltersystem.com
14 N. Central Ave.
Casey, Illinois
800 475-2029

CUSTOMER	
DESCRIPTION	4 Inch Jet Filter Assembly
PART DESCRIPTION	Filter Assembly
MATERIAL	
SURFACE	
SCALE	1=1
REV	B
DRAWN BY	ADK
CHECKED BY	ADK
DWG NO.	JF4PC
PAGE	1
DATE	7-19-2016
SHEET	1 OF SHTS
DETAIL NO.	