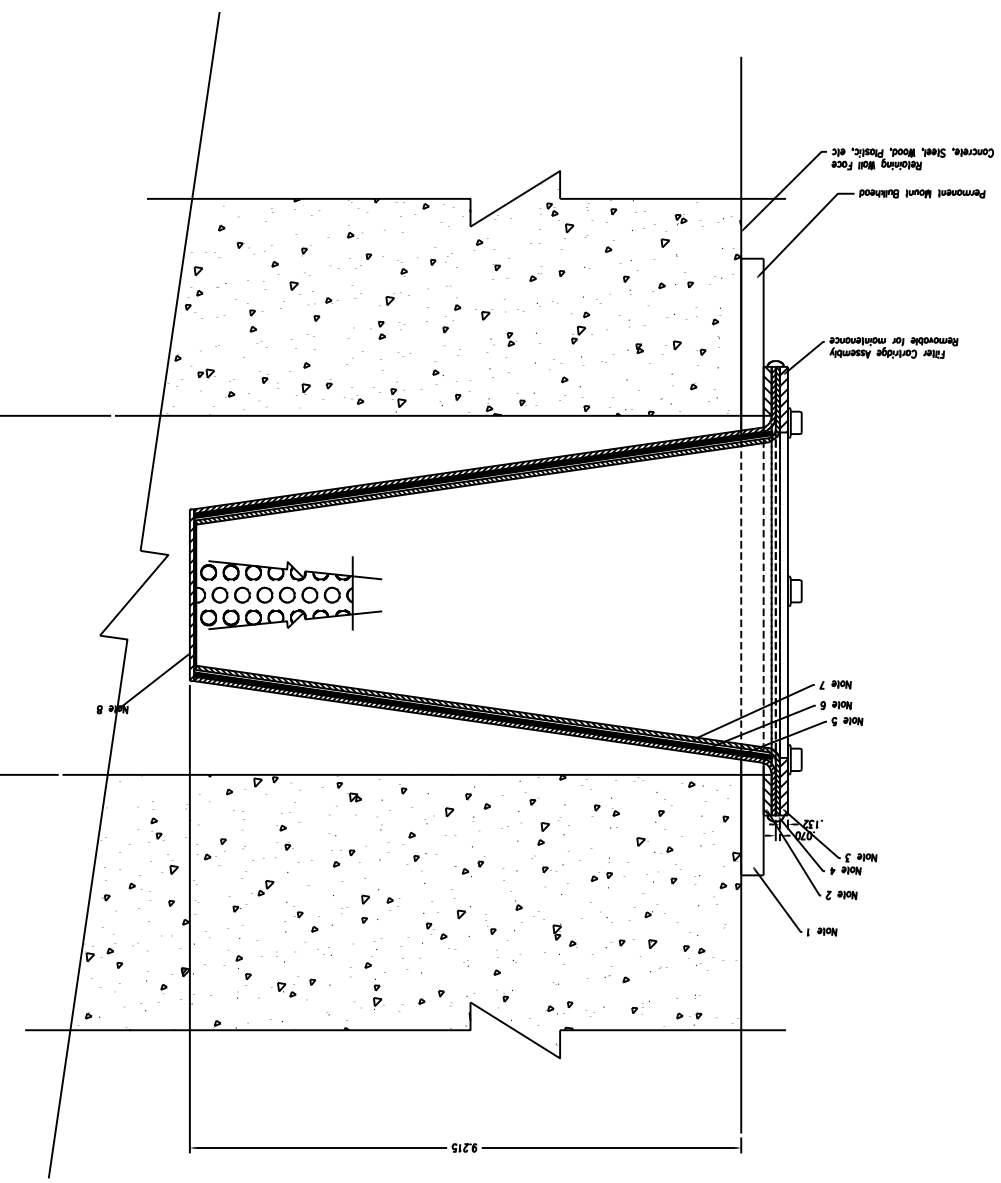

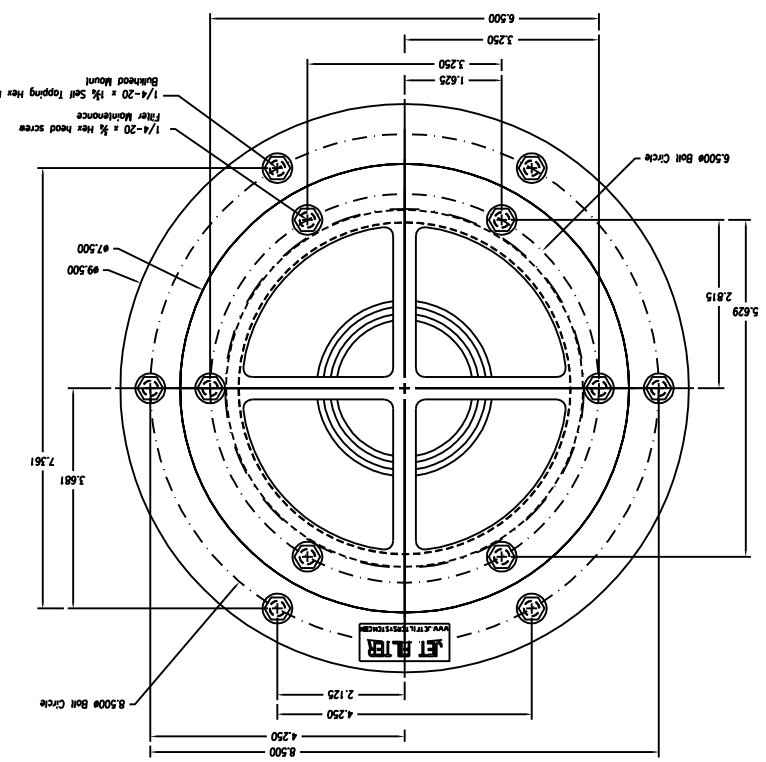

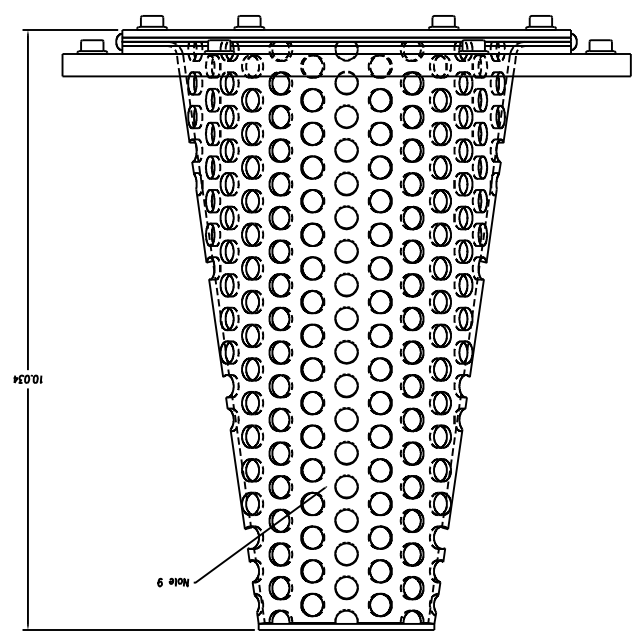

Ver	Date	Description
A	9/21/11	Release for Production

NOTES

Note 1 : Bulkhead Plate : ASTM A-36 /316 stainless steel
Note 2 : Inner Flange Washer : ASTM A-36 HRS
Note 3 : Outer Flange Washer : ASTM A-36 HRS
Note 4 : Rod Bend : SS Bending Rod Wire
Note 5 : Outer Core : 16 Ga SS Perf 3/8 x 3/4 centers
Note 6 : Filter Media
Note 7 : Inner Core : 16 Ga SS Perf 3/8 x 3/4 centers
Note 8 : Core Cap : ASTM A-36 HRS
Note 9 : Powder coat assembly Black or equivalent
Note 10:

JET FILTER SYSTEM LLC
14 NORTH CENTRAL AVE
CASEY, ILLINOIS 62420
UNITED STATES
PH: (800) 475-2029
FAX: (800) 475-2136

CLIENT
TOL. EXCEPTION
MAT. EXCEPTION

TOLERANCES UNLESS OTHERWISE SPECIFIED
2 PLACE ± 3 PLACE ± 4 PLACE ANGLES

MATERIAL See Note	FINISH Brushed	SCALE 1=1	REV A
DRAWN BY ADK	CHECKED BY	TITLE 6 Inch Steel Jet Filter	
DATE 2-2011	SHEET of SHEET	DWG NO. TONY	
SIZE	DO NOT SCALE DRAWING		

TOLERANCES TRUE WITHOUT SHRINK OR FLASHES, ROUNDNESS, SQUARENESS, ETC. MUST BE WITHIN 51%TED (TIC) OF NOMINAL DIMENSIONS

Hemp AMSE PRODUCTION
BREAK ALL UNNECESSARY SHARP EDGES